

Calibration of Optical Flow Sensor (OFS)

Using NIST Traceable Data

March 2005

Optical Scientific, Inc.
205 Perry Parkway
Gaithersburg, MD 20877

Tel: 301-963-3630
Fax: 301-948-4674
sales@opticalscientific.com

1. NIST Wind Tunnel Test Set-up

Optical Scientific Inc. (OSi) submitted an Optical Flow Sensor (OFS) to the National Institute of Standards and Technology (NIST) for wind tunnel testing. The test and calibration of the OFS was performed in the 1.5-m by 2.1-m rectangular test section of the NIST Dual Test Section Wind Tunnel. In this tunnel, the air speed is measured by NIST Standard sensors.

The test was conducted at a location 7-m downstream from the entrance area of the wind tunnel test section. During the test, the air stagnation temperature, stagnation pressure and the relative humidity were measured in the tunnel settling-chamber. The air temperature, barometric pressure, and relative humidity were measured at the location where the NIST standard was positioned.

To determine the reproducibility of the OFS under test, two calibration cycles were done separated by a tunnel shutdown. During each calibration cycle, each air speed was measured five times to ascertain the repeatability of the OFS under test.



Figure 1. OSi's Optical Flow Sensor Receiver Heads (top view) as installed in the NIST Wind Tunnel.

2. NIST Wind Tunnel Test Results

As shown in Figure 1, the OFS was placed outside the tunnel. The light beam is perpendicular to the flow and roughly 4-m apart from transmitter to receiver. The width of the tunnel at this location is 2.1-m. The transmitter emitted a visible beam of light which entered the Dual Test-section Wind Tunnel through one of its Plexiglas windows. The NIST standard was placed in the tunnel nearby the sensing area of the OFS under test. Temperature and humidity sensors were placed in the area where the NIST standard made its measurements. These parameters were used to calculate the air velocity at this position.

The OFS uses optical scintillation to measure the flow rate by temporal correlation – the time-difference between optical scintillation signals detected by the two detectors aligned parallel to the flow direction. The method is non-intrusive and measures the average flow across an optical path. The OFS is designed to make measurements in turbulent airflow. The OFS measured flow rate is independent of the temperature, pressure, relative humidity and the opacity of the flowing media. Therefore, no correction is needed to the measurements of OFS.

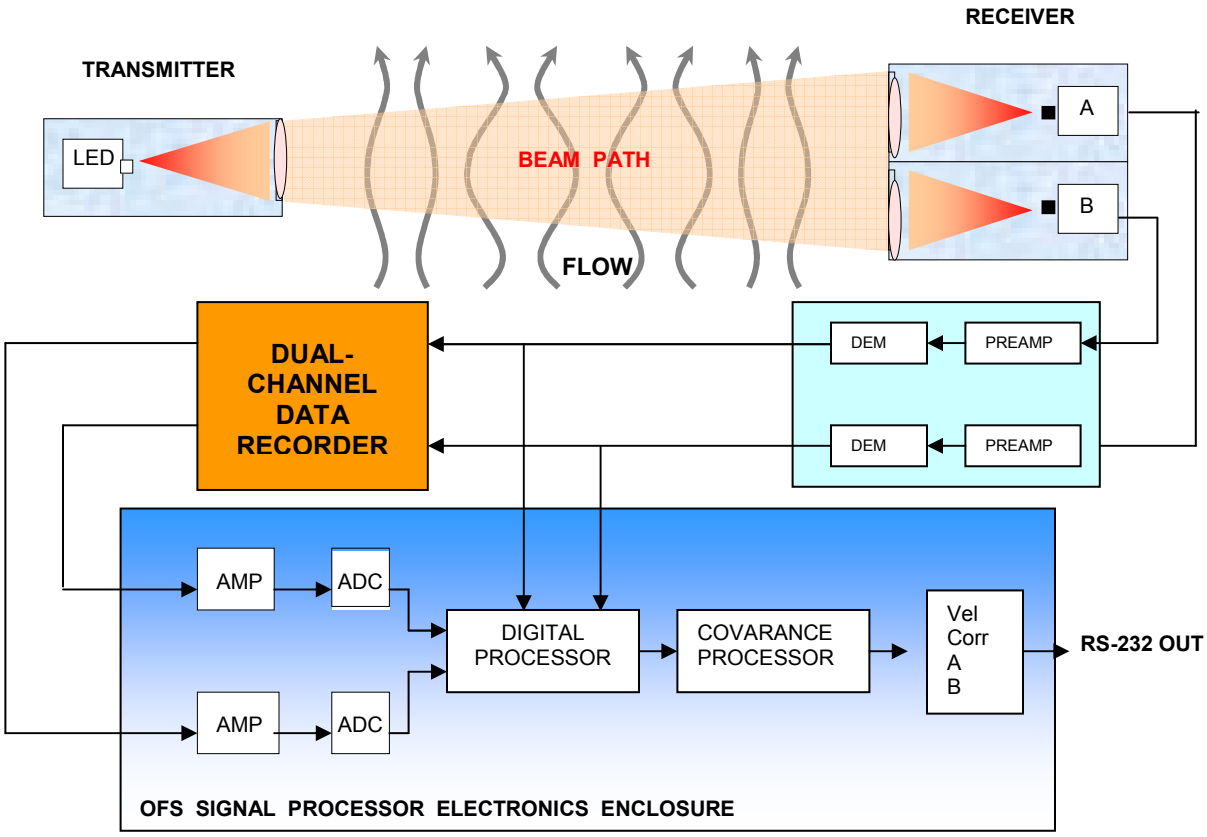

Figure 2. NIST Wind Tunnel Test Block Diagram

During the test, the raw signals detected by the two optical receivers were recorded on a dual-channel data recorder (see Figure 2) for different wind tunnel air velocities. These data are used as the laboratory reference OFS calibration standard. Table 1 shows that the reproducibility uncertainty of OFS. Throughout the range from 0.03 m/s to 100 m/s, the standard deviation of the reproducibility uncertainty is 0.87%. A smaller reproducibility uncertainty indicates a better repeatability of the OFS sensor. The results clearly indicate that OFS is a reliable sensor with very repeatable measurement performance. It should also be noted that the reproducibility uncertainty included not only the uncertainty of the OFS measurements but also the uncertainty of the NIST standards! Each value of air speed represents the average of 10 readings. The standard deviation of the accuracy of OFS (after calibration) is 0.91% of that of the NIST standard. A scatter diagram of the air speed measured by the NIST standard and that of the OFS is shown in Figure 3.

Table 1. OFS measured Air Speed vs NIST Standard at NIST Wind Tunnel

NIST Air Speed m/s	OFS Output m/s	OFS Accuracy m/s (%)
0.02	0.02	-0.00 (-0.00%)
0.04	0.04	0.00 (0.00%)
0.08	0.08	-0.00 (-0.00%)
0.16	0.16	0.00 (0.00%)
0.31	0.31	-0.00 (-0.00%)
0.40	0.40	-0.00 (-0.00%)
0.65	0.65	0.00 (0.00%)
1.24	1.23	-0.01 (-0.81%)
1.59	1.58	-0.01 (-0.56%)
2.58	2.61	0.03 (1.16%)
4.94	4.90	-0.04 (-0.84%)
7.59	7.69	0.10 (1.35%)
9.75	9.61	-0.14 (-1.44%)
14.80	15.03	0.23 (1.55%)
19.70	20.07	0.37 (1.88%)
24.50	23.96	-0.54 (-2.20%)
29.00	28.42	-0.58 (-2.00%)
35.00	34.53	-0.47 (-1.34%)
40.00	40.35	0.35 (0.88%)
45.00	44.75	0.25 (0.56%)
49.00	48.30	-0.70 (-1.43%)
58.00	57.22	-0.78 (-1.34%)
70.00	69.58	-0.42 (-0.60%)
80.00	80.47	0.47 (0.59%)
90.00	90.57	-0.57 (-0.63%)
100.00	101.10	1.10 (1.10%)
Overall		**0.87%**

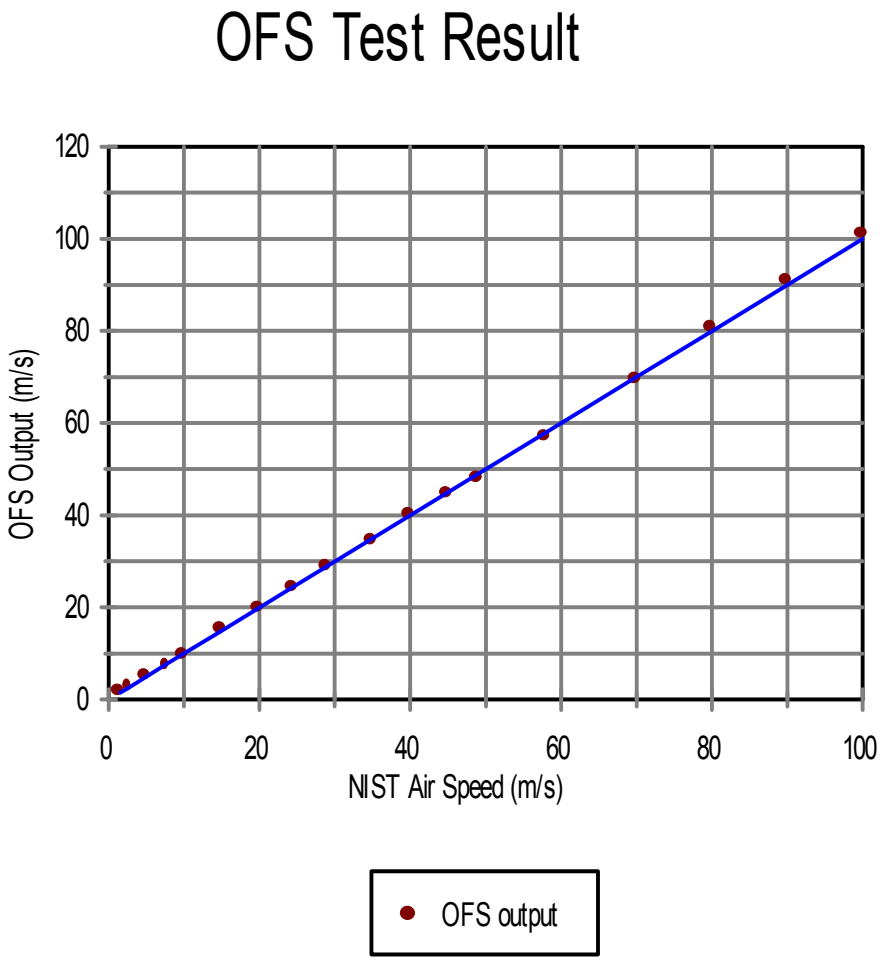

Figure 3. OFS Measured Air Speed vs NIST Standard at NIST Wind Tunnel.